WIRING DIAGRAM

Residential "FVIR" Compliant Gas Fired Power Direct Vent Model with the Generation II gas control valve UG50-62

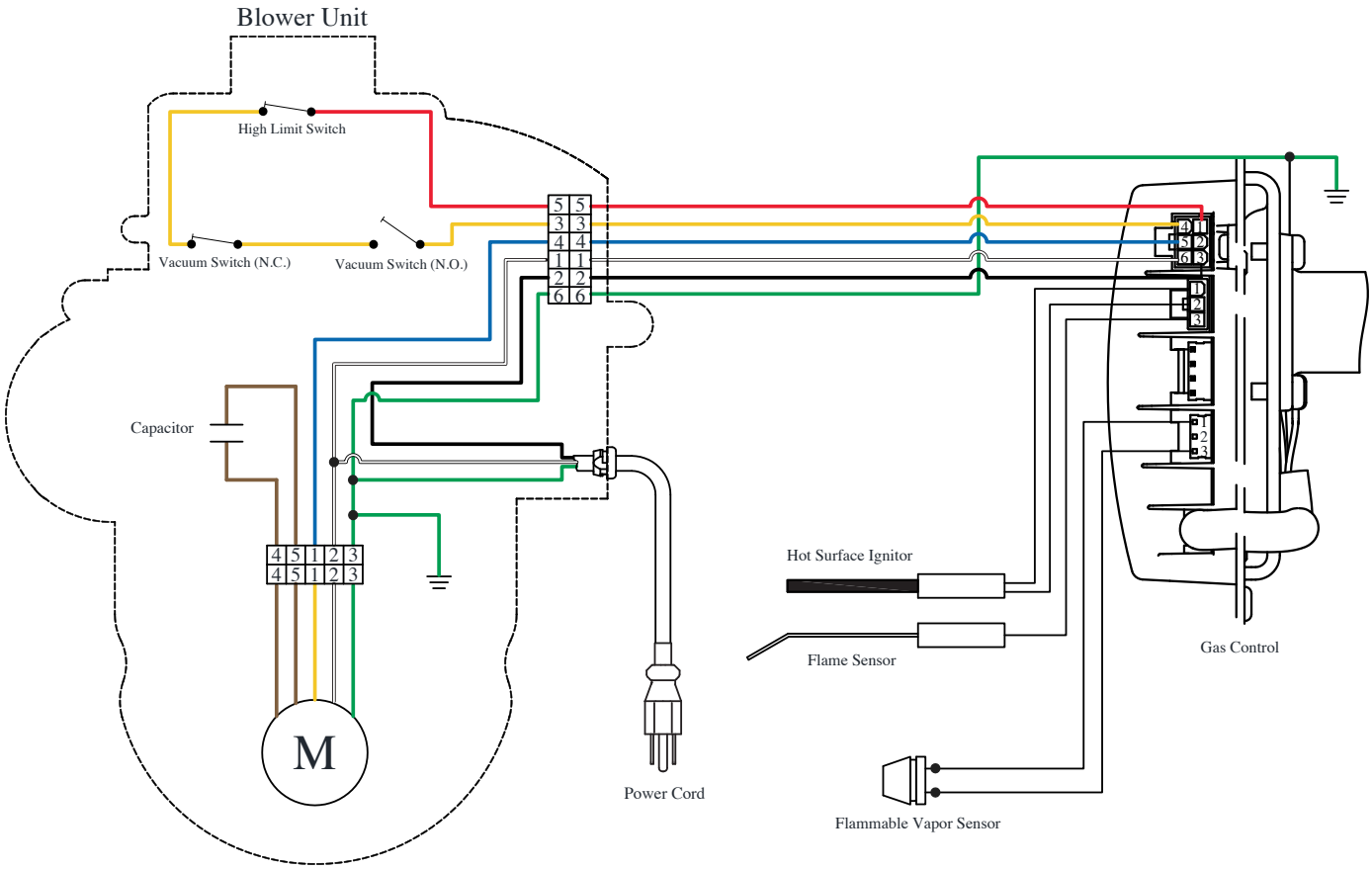

In accordance with our company policy of on-going product improvement, Giant Factories Inc. reserves the right to make changes without prior notice. **giantinc.com**

40 Lesage Avenue Montréal-East (Québec) CANADA H1B 5H3 • **Telephone : (514) 645-8893** • Fax : (514) 640-0969

GI-DF019An-0517